ECF 200118

Ø200x118mm(Ø7.87"X4.65")

MOTOR	Outer rotor motor Ø92mm
IMPELLER	Plastic PA6.6
BEARING	Ball
INSULATION	Class A
OPERATING TEMPERATURE	-20°C to + 60°C
INSULATION RESISTANCE	10M Ω min. @500 VDC
DIELECTRIC STRENGTH	5mA Max. at 500 VAC for 1 minute
WEIGHT	2.25 kg
ROHS COMPLIANCE	Yes
IP LEVEL	IP21 (Special IP Rating On Request)

200 mm

SPECIFICATION

MODEL NO.	RATED VOLTAGE(V)	RATED CURRENT(A)	INPUT POWER(W)	SPEED (RPM)	MAX. AIR PRESSURE		MAX. AIR FLOW		NOISE dB(A) @1M
					inchH2O	mmH2O	CFM	m3/min	
ECF200118V2HB	230	1.5	219	4000	3.5	88.7	483	13.66	65

DIMENSION

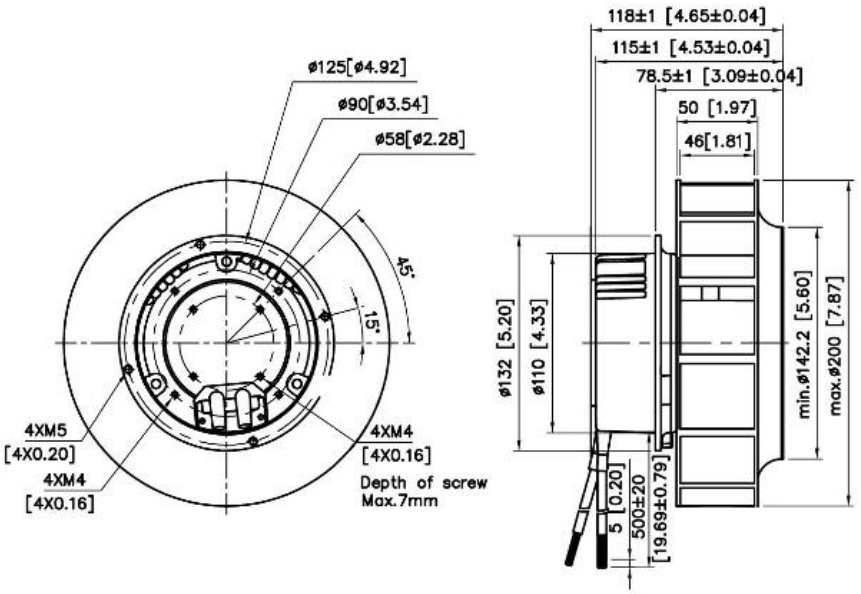

UNIT: mm[inch]

Wiring Diagram

DC

Red---10VDC Output Max 1.1mA
Blue---GND
Yellow--0-10V/PWM Speed Control
White---FG, Open Collector

AC

Brown--L
Blue--N
Green/Yellow--PE

AIR PERFORMANCE

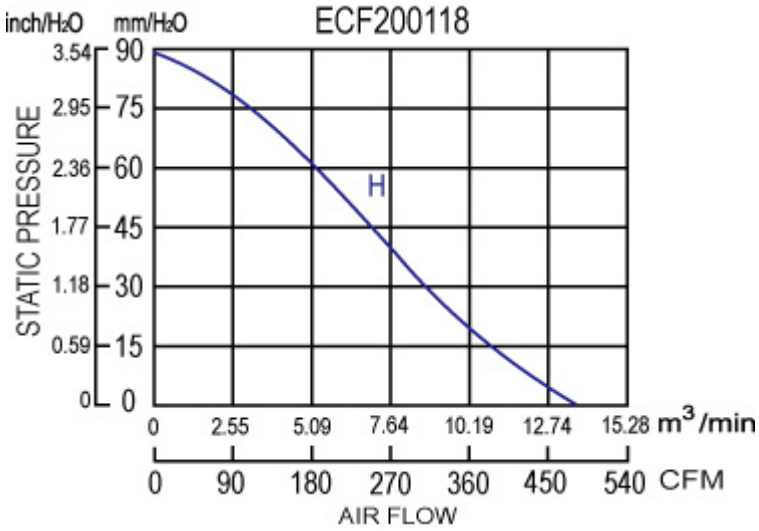

SYM BANG