DB 242264

242x264x240mm(9.53"x10.39"x9.45")

HOUSING	Steel
IMPELLER	Steel
BEARING	Ball
OPERATING TEMPERATURE	0°C to + 40°C
DIELECTRIC STRENGTH	5mA Max. at 700 VDC for 1 second
INSULATION RESISTANCE	10M Ω min. @500 VDC
WEIGHT	4.3 kg
ROHS COMPLIANCE	Yes
IP LEVEL	IP21 (Special IP Rating On Request)

242 mm

SPECIFICATION

MODEL NO.	RATED VOLTAGE(V)	RATED CURRENT(A)	INPUT POWER(W)	SPEED (RPM)	MAX. AIR PRESSURE		MAX. AIR FLOW		NOISE dB(A) @1M
					inchH2O	mmH2O	CFM	m3/min	
DB242264V24HB	24	9	216	3570	4.02	102	327.7	9.27	75

DIMENSION

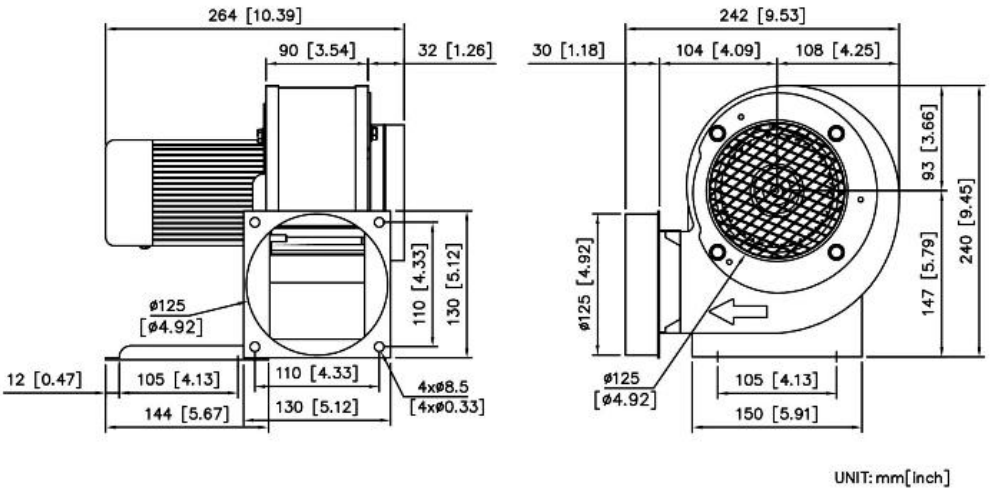

AIR PERFORMANCE

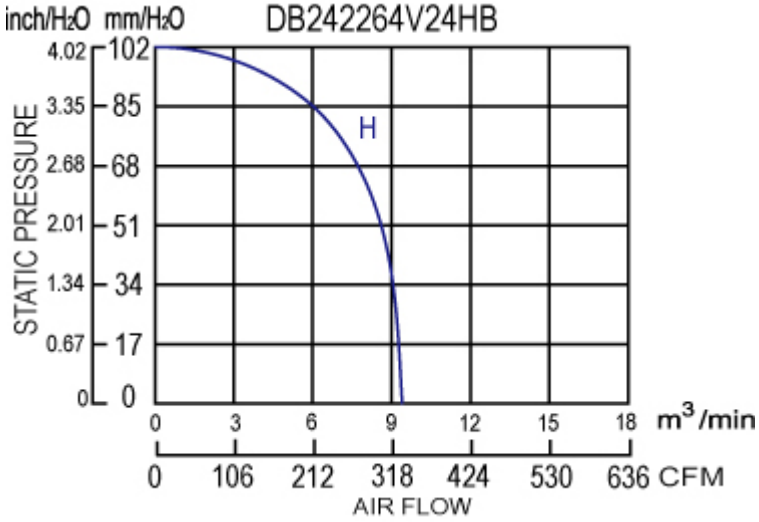

SYM BANG