DCF 318120-B

Ø318x120mm(Ø12.52"x4.72")

MOTOR	Outer rotor motor Ø92mm
IMPELLER	Metal
BEARING	Ball
OPERATING TEMPERATURE	-20°C to + 60°C
INSULATION RESISTANCE	10M Ω min. @500 VDC
DIELECTRIC STRENGTH	5mA Max. at 500 VAC for 1 minute
WEIGHT	2.36 Kg
ROHS COMPLIANCE	Yes
IP LEVEL	IP21 (Special IP Rating On Request)

318 mm

SPECIFICATION

MODEL NO.	RATED VOLTAGE(V)	RATED CURRENT(A)	INPUT POWER(W)	SPEED (RPM)	MAX. AIR PRESSURE		MAX. AIR FLOW		NOISE dB(A) @1M
					inchH2O	mmH2O	CFM	m3/min	
DCF318120V48HB-B	48	2.5	120	1600	1.89	48.2	982.7	27.81	64

DIMENSION

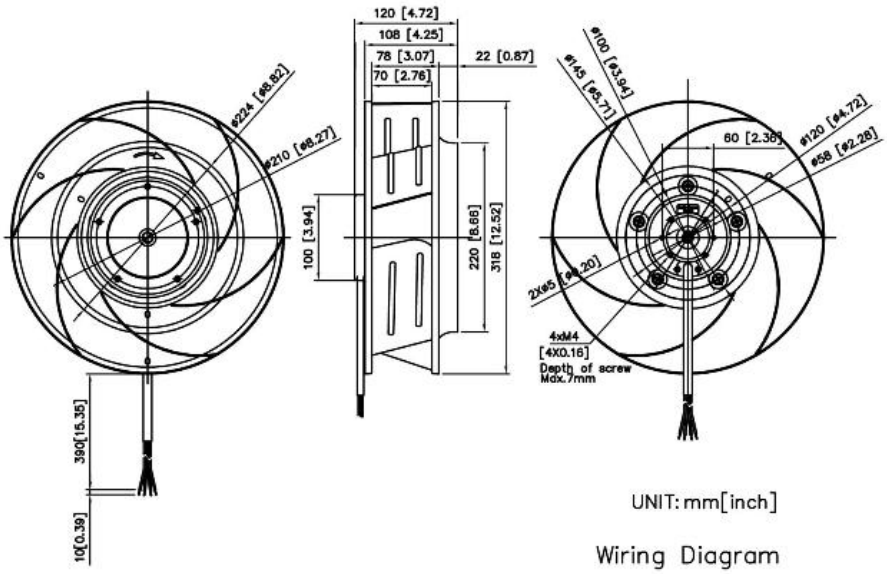

UNIT: mm[inch]

Wiring Diagram

Red —— +VDC
Blue —— GND
Yellow —— 0–10V/PWM Speed Control
White —— Tachometer (FG)

SYM BANG

AIR PERFORMANCE

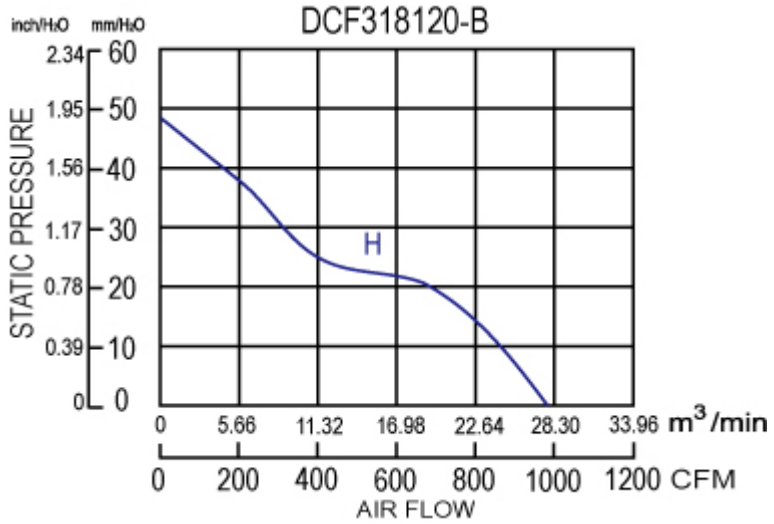

SYM BANG