DB 1504

15x15x4mm(0.58"x0.58"x0.15")

HOUSING	Liquid Crystalline Polymer, UL94V-0
IMPELLER	Liquid Crystalline Polymer, UL94V-0
BEARING	Sleeve
OPERATING TEMPERATURE	-10°C to + 60°C
DIELECTRIC STRENGTH	5mA Max. at 500 VAC for 1 minute
INSULATION RESISTANCE	10M Ω min. @500 VDC
WEIGHT	1.5 g
ROHS COMPLIANCE	Yes
APPLICATION	Wearable dynamic air quality sampling applications, auxiliary temperature control application, and mini projector.
IP LEVEL	IP21 (Special IP Rating On Request)

15 mm

SPECIFICATION

MODEL NO.	RATED VOLTAGE(V)	RATED CURRENT(A)	INPUT POWER(W)	SPEED (RPM)	MAX. AIR PRESSURE		MAX. AIR FLOW		NOISE dB(A) @1M
					inchH2O	mmH2O	CFM	m3/min	

DIMENSION

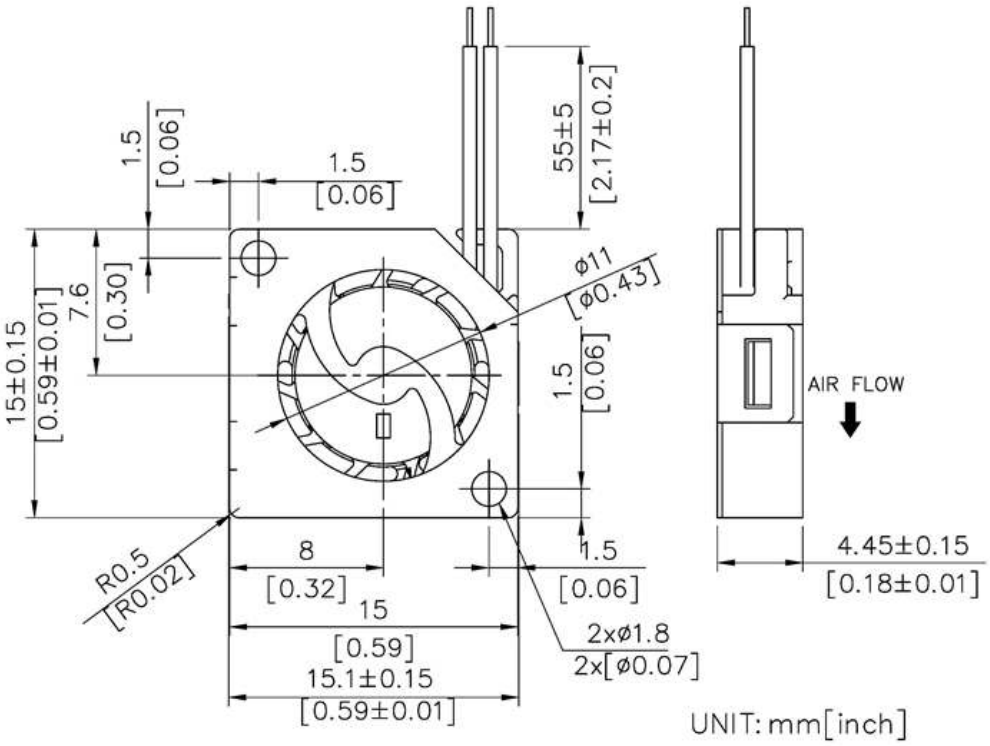

SYM BANG

AIR PERFORMANCE

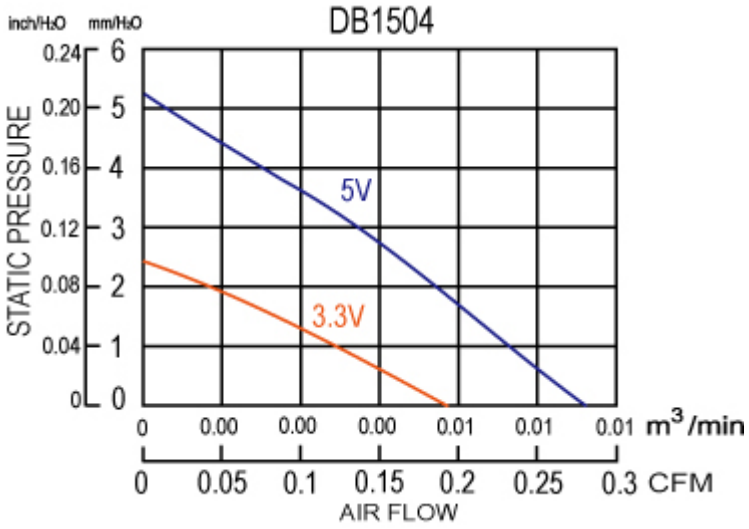

SYM BANG